HAMBURG INDUSTRIES CO., LTD.

6F., No. 12, Ln. 270, Sec. 3, Beishen Rd., Shenkeng Dist., New Taipei City 222, Taiwan

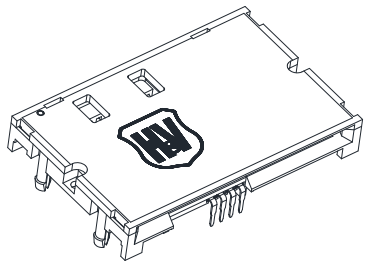

EMV & NDS Compliant

TECHNICAL CHARACTERISTICS

1. General Characteristics

Dimension: 62.00L x 40.00W x 9.15H mm
Standoff H= 3.00 mm
Weight: Approx. 13.8 g
Contact principle: Friction technology
Operating position: Shaft up / Down / Horizontal
Mounting System: Thru-Hole with snap-in lock
Durability: 100,000 cycles min.

2. Mechanical Characteristics

Insulation material: Thermoplastic, UL 94V-0
RoHS Directive 2011/65/EU Compliant

3. Electrical Characteristics

Number of contacts: 8 pins
Contact resistance: 50 mΩ typical, 100 mΩ max.
Insulation resistance: >1000 MΩ / 500 VDC
Switch type: Blade
Operation: Normally Close

4. Solderability

Wave: 260°C, 5 sec. Max.
IR reflow: Not applicable
Manual soldering: 360°C, 3 sec. Max.

5. Environmental Characteristics

Operating temperature: - 40°C ~ + 85°C
Operating humidity: 10 % ~ 95 % RH
Storage temperature: - 40°C ~ + 85°C
Storage humidity: 10 % ~ 95 % RH

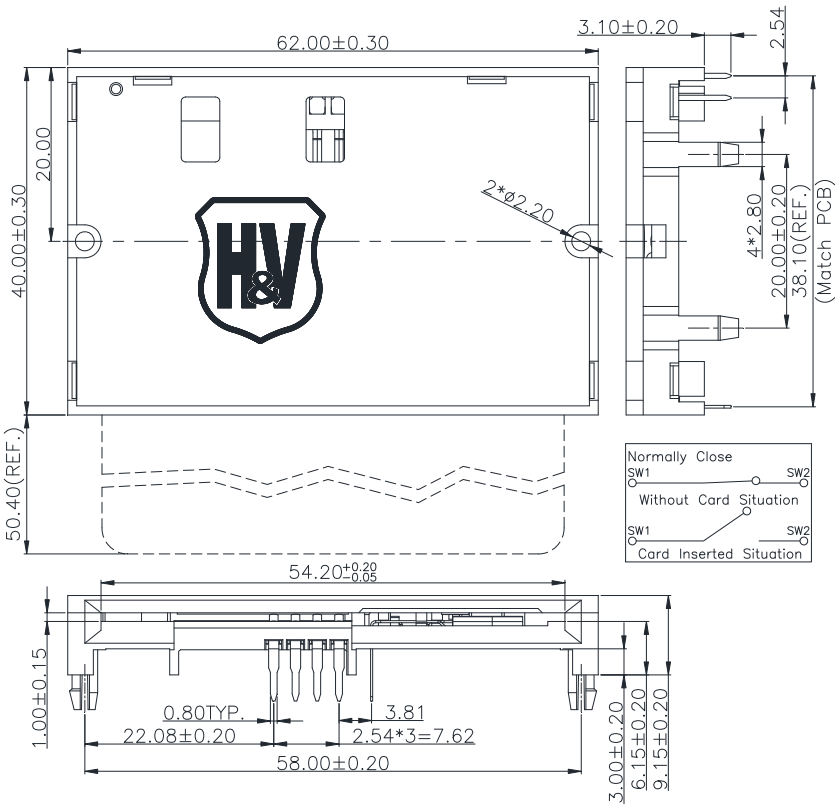

Unit: mm; Tolerances: ±0.15 mm
Mechanical outline dimension

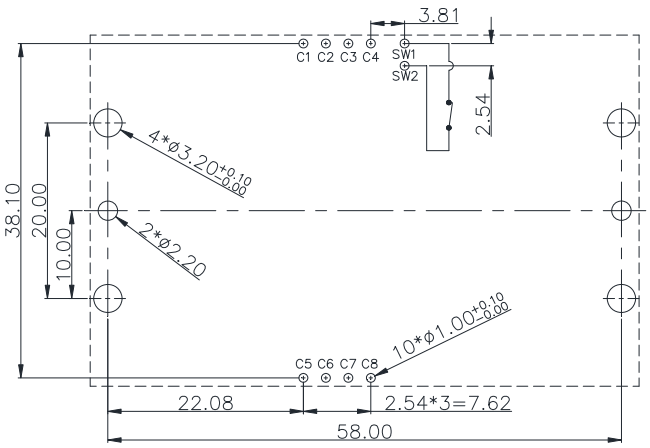

Unit: mm; Tolerances: ±0.05 mm
Reference dimension for PCB layout

H&V Smart Card Acceptor

Model No.: ICA-615

Revision: 1.4	Date: MAY 01, 2014

For further information, please contact:
Tel: +886 2 2662 8882(Rep.) Fax: +886 2 2662 7201~2 E-mail: taipei@hamburg.com.tw URL: http://www.hamburg.com.tw